> Machine dimensions
Dimensioni macchina
Machinemessungen
Dimensions machine
Dimensiones de la màquina

Size / Weigth packaging	Kg	Kg	LxWxH
> XL46 / 461	220	295	125x125x140
> SM48 / 481	220	295	160x160x205

> XL46 / XL 461

	Min.	Max
L	1180	-
W	1120	-
H	1490	1750
cbh	445	705
AS 77	545	905
AS 80	645	1025

> SM48 / SM481

	Min.	Max
L	2280	-
W	1260	-
H	1740	1890
cbh	430	580
AS 77	530	680
AS 80	630	780

> Box dimensions
Dimensioni delle scatole
Kartonabmessungen
Dimensions des boîtes
Dimensiones de las cajas

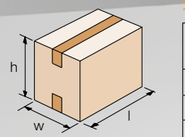

> XL46 / XL 461

	K12R std. / K11R on demand	
	Min.	Max
l	150	∞
w	140	650
h	100	650

> SM48 / SM481

	K12R	
	Min.	Max
l	200	∞
w	200	800
h	120	800

> Taping units
Unità nastranti
Verschliesseinheiten
Unité enrubanneuse
Unidades de precinto

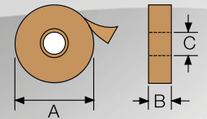

	K11R/ K12R
	mm
A	410 Max
B	50 / 75
C	76

> Production capacity
Capacità di produzione
Produktionskapazität
Capacité de production
Capacidad de producción

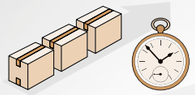

> XL46 / XL 461	Bph
Max pcs.*	600

> SM48 / SM481	Bph
Max pcs.*	600

* Always based on shorter manageable box

> Air consumption
Consumo aria
Luftverbrauch
Consommation d'air
Consumo de aire

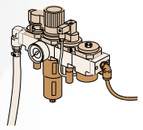

> XL46 / XL 461	Nl.
Cycle	12

> SM48 / SM481	Nl.
Cycle	14

from 5,5 bar to 7 bar

> Standard voltage
Voltaggio standard
Standardspannung
Tension standard
Voltaje estándar

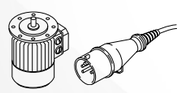

> XL46 / XL 461

380/400V - 50Hz - 3F	
440V - 60Hz - 3F	
Amps	1,08
Power kW	0,26
Phase	3Ph + N + PE

> SM48 / SM481

380/400V - 50Hz - 3F	
440V - 60Hz - 3F	
Amps	1,08
Power kW	0,26
Phase	3Ph + N + PE

> Optionals
Accessori
Zübehor
Accessories
Accessorios

> AS80
Higer legs
Set gambe più alte
Höhere Stützen
Pieds plus hauts
Set patas mas altas

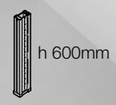

> AS77
Casters
Set ruote
Satz Umlaufräder
Roues
Set ruedas

> RG
Roller conveyor
Piani a rulli Idler
Rollenbahnen
Plans à rouleaux
Tramo de rodillos

> GTL - GTR
Extendable conveyor
Rulliera estensibile
Ausziehbare rollenbahnen
Convoyeur extensible
Rodillos extensibles

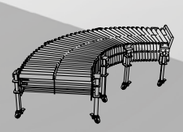

Cod.pubbl.: SBC0028665

Idépack Verpakkingsmachines B.V.
Zeilmaker 8
NL-3861 SM NIJKERK
The Netherlands

Tel: +31(0)33-299 00 08
info@idepack.com
www.idepack.com

www.zen-arte.it

SIAT
M. J. MAILLIS GROUP

Carton Sealing Machines

XL46/XL461 SM48/SM481

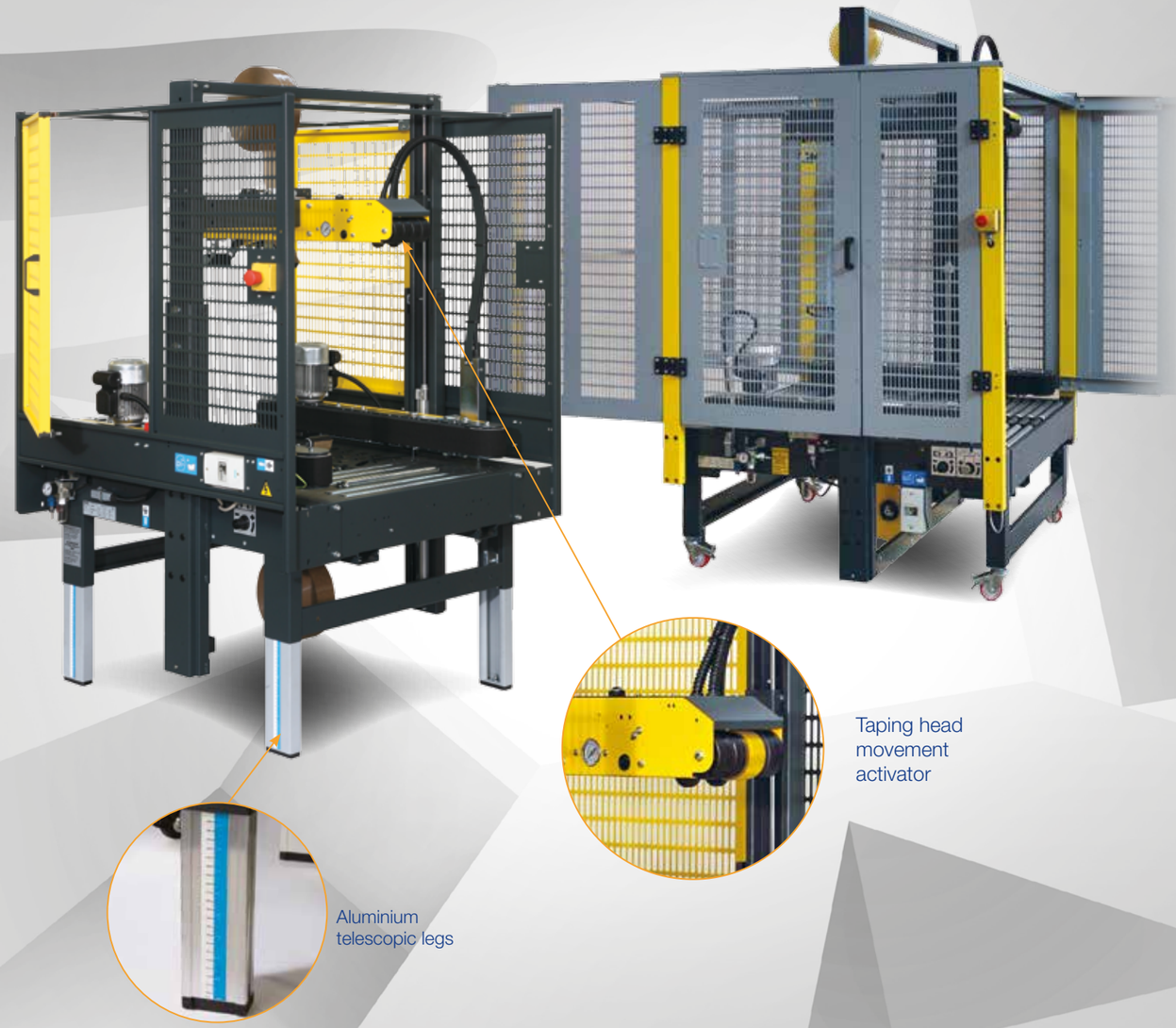

Taping head movement activator

Aluminium telescopic legs

CE

XL46/XL461

XL46 / 461 is a Range of Semi-Automatic Random Case Sealer Machines.

XL46 / 461 (large boxes) models are semi-automatic “Random” case sealers: it means that the machine is able to adjust itself on the various box sizes.

The machines apply automatically two self-adhesive tape stripes on the upper and lower boxes middle line. The adjustment and use are intuitive, simple and fast.

On the XL46 version the rest position of the upper taping unit is DOWN so that the feeding of the boxes is performed manually by the operator.

On the XL461 version the rest position of the upper taping unit is UP so that, with some particular devices, an automatic boxes feeding can be performed.

XL46

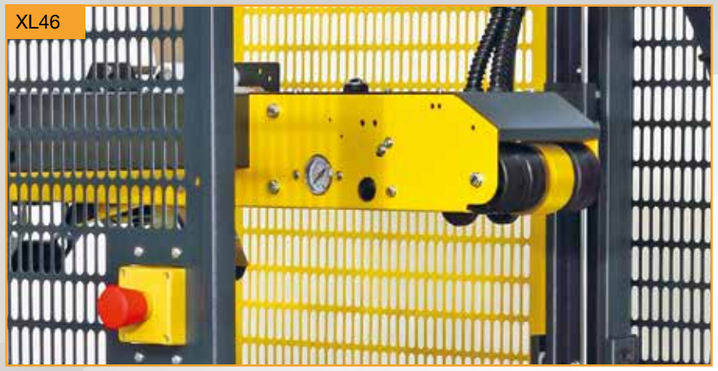

XL461

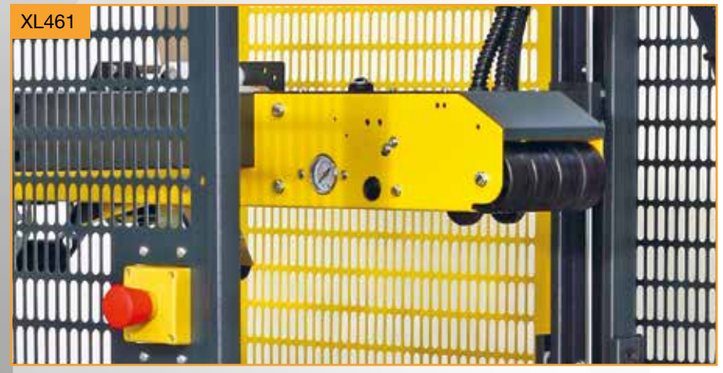

Key Features

- Automatic adjustment on various box sizes
- Side lower driven belts (2 x 75 mm width each)
- Driven belts speed 20 m/min.
- 2 x Motors kW 0,13 each
- 2 x Taping head K12R - 75 mm width
- Extruded aluminium telescopic legs with millimetric guide
- Locked stop emergency button
- On/Off magneto-thermic switch
- Adjustable descending height stopper of the top taping unit to increase speed rate
- Top head pneumatic pressure regulators
- Safety protection doors connected to electro-pneumatic disconnection switches
- Adjustable working height 445 - 705 mm

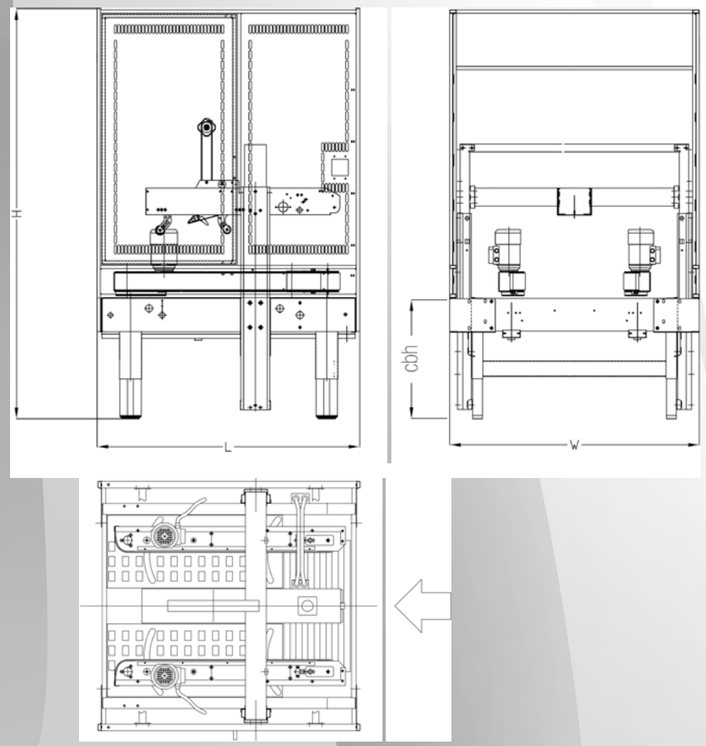

SM48/SM481

SM48 / 481 is a Range of Semi-Automatic Random Case Sealer for Large and King Boxes.

SM48 / 481 model is an automatic “Random” case sealer: it means that the machine is able to adjust itself on the various box sizes.

It allows a perfect closing of the box by adhesive tape thanks to the double top and bottom driven system and the super reliable taping unit K12R. Utilization of SM48 is intuitive, simple and fast.

On the SM48 version the rest position of the upper taping unit is DOWN so that the feeding of the boxes is performed manually by the operator.

On the SM481 version the rest position of the upper taping unit is UP so that, with some particular devices, an automatic boxes feeding can be performed.

Key Features
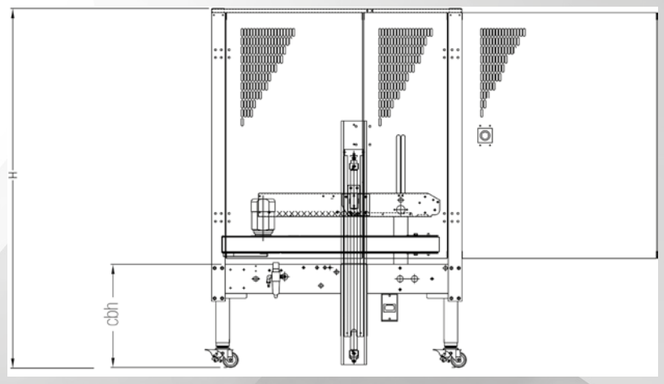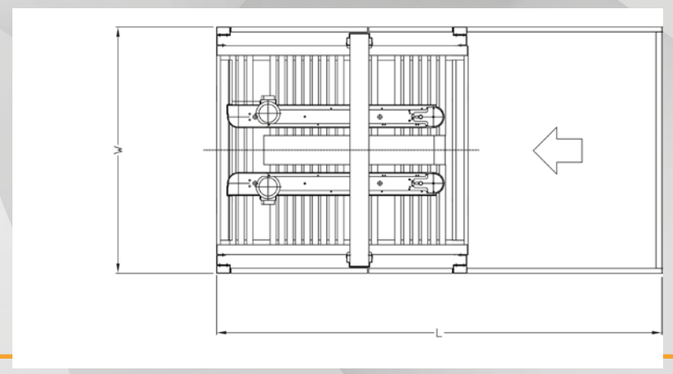
- Automatic adjustment on various box sizes
- Side lower driven belts (2 x 75 mm width each)
- Driven belts speed 20 m/min.
- 2 x Motors kW 0,18 each
- 2 x Taping head K12R - 75 mm width
- Extruded aluminium telescopic legs with millimetric guide
- Locked stop emergency button
- On/Off magneto-thermic switch
- Adjustable descending height stopper of the top taping unit to increase speed rate
- Top head pneumatic pressure regulators
- Safety protection doors connected to electro-pneumatic disconnection switches
- Adjustable working height 500 - 750 mm